Uncontrolled Copy

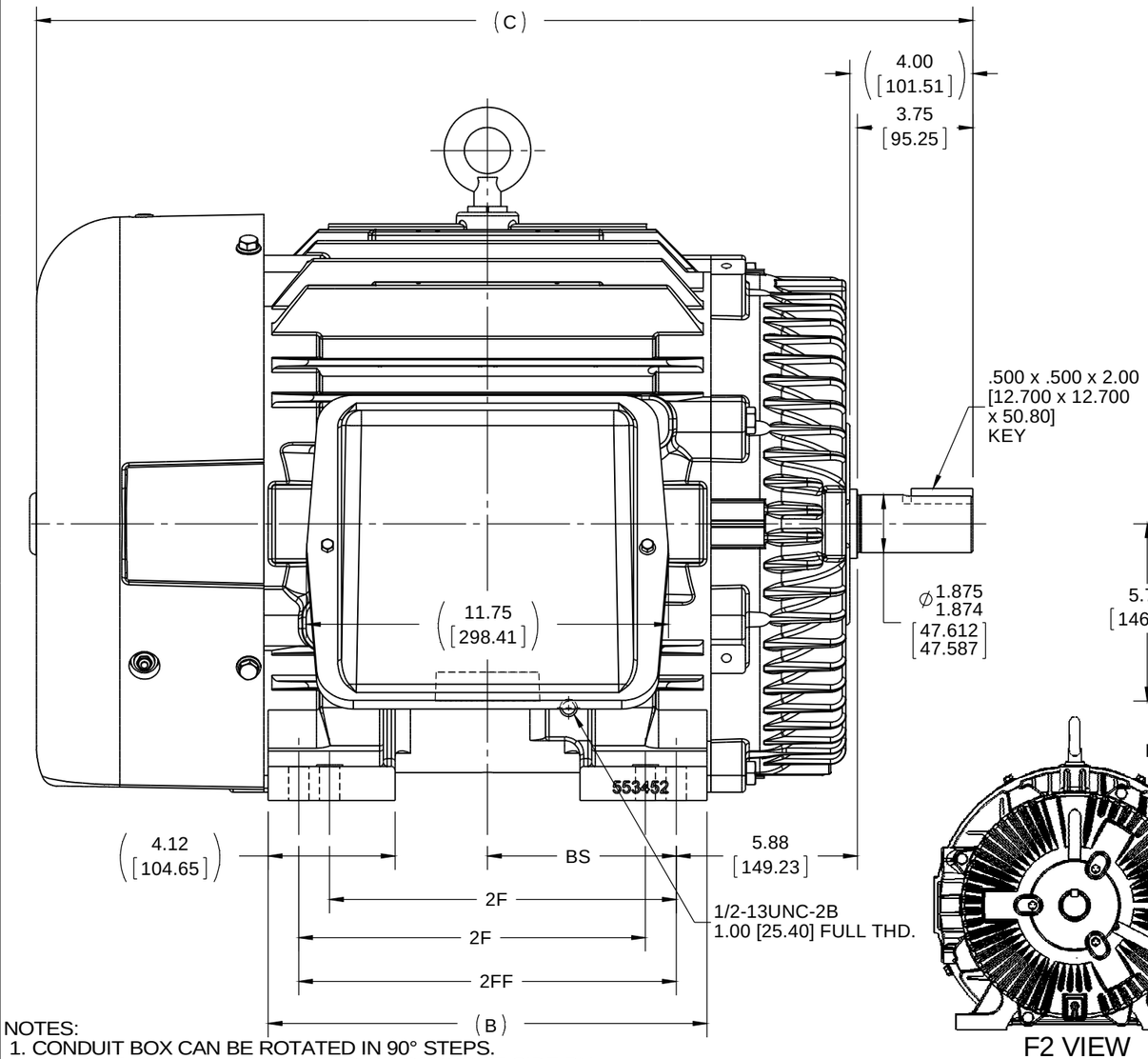


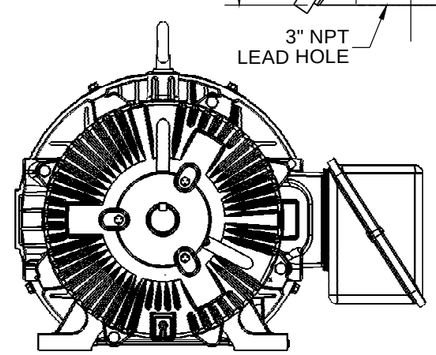

F2 VIEW

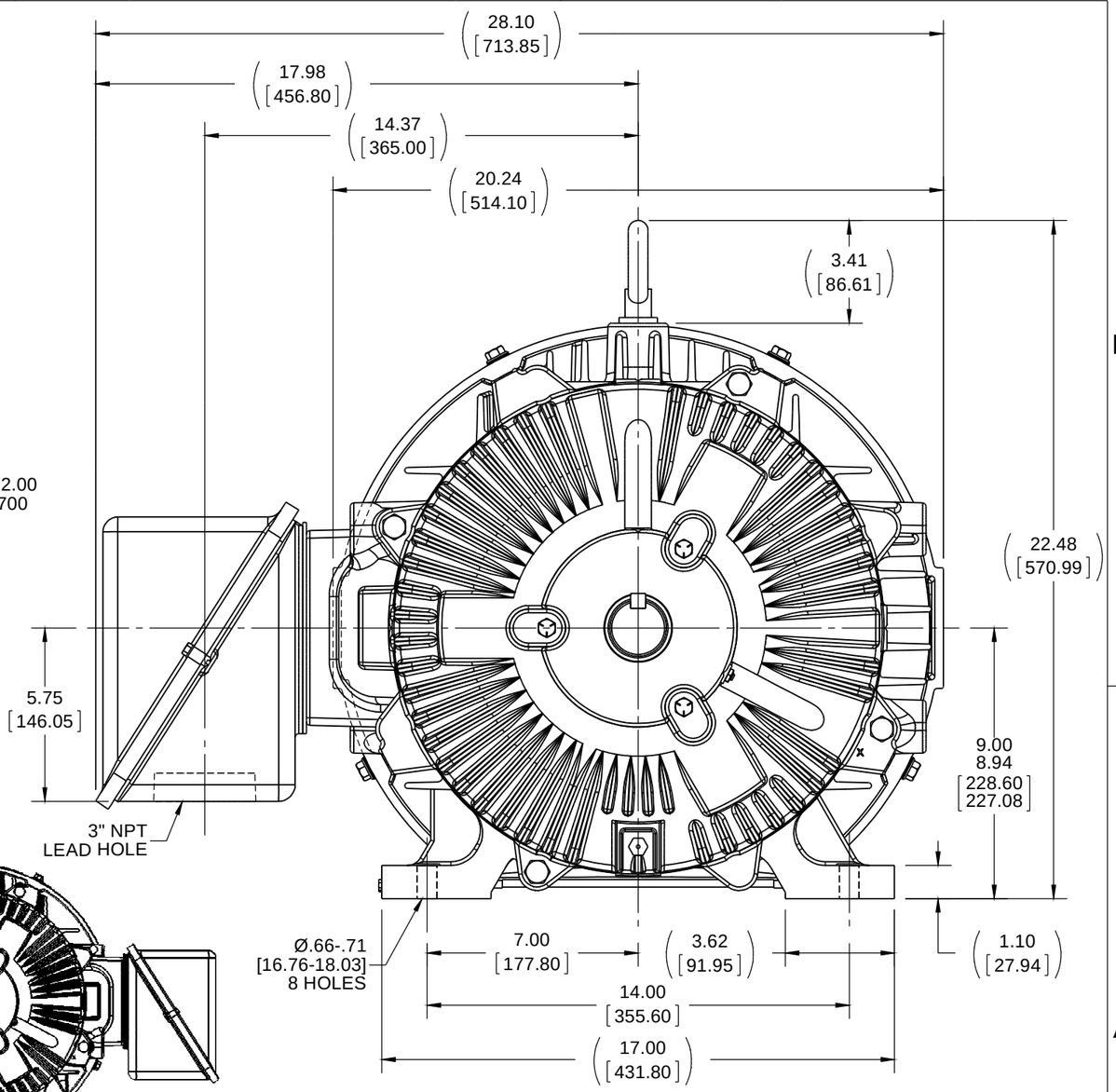


NOTES:
1. CONDUIT BOX CAN BE ROTATED IN 90° STEPS.
2. CONDUIT BOX CAN BE MOUNTED ON OPPOSITE SIDE BY REMOVING BRACKETS AND TURNING FRAME 180°.
3. NAMEPLATES TO BE READ FROM CONDUIT BOX SIDE OF MOTOR.
4. DIMENSION IN [ ] DESIGNATE MILLIMETERS.

| DASH | FRAME | B | C | 2F | 2FF | BS |
|---|---|---|---|---|---|---|
| 1350 | 364TS/US | 13.25 [336.55] | 29.38 [746.25] | 11.25 [285.75] | - - - | 5.62 [142.75] |
| 1450 | 364/365TS/US | 14.25 [361.95] | 30.38 [771.665] | 11.25 [285.75] | 12.25 [311.15] | 6.12 [155.45] |

| DRAWING REVISION | REVISION BY | DATE |
|---|---|---|
| E | JJB | 11-11-2014 |
| ECO: ECO-0064944 | APPROVED BY | DATE |
| ECO DESCRIPTION: UPDATED TO CURRENT STANDARDS | | |

COPYRIGHT REGAL BELOIT AMERICA, INC. ALL RIGHTS RESERVED.
PROPRIETARY AND CONFIDENTIAL INFORMATION - THIS DOCUMENT IS THE PROPERTY OF REGAL BELOIT AMERICA, INC. ("OWNER") AND CONTAINS OWNER'S PROPRIETARY INFORMATION. ANY PERSON, CORPORATION OR OTHER FIRM RECEIVING IT IS DEEMED, BY RECEIVING IT, TO AGREE THAT IT, AND/OR ANY PART OF IT, SHALL NOT BE DISCLOSED TO ANY PERSON, CORPORATION OR OTHER ENTITY, DUPLICATED, AND/OR USED, EXCEPT AS EXPRESSLY APPROVED IN WRITING IN ADVANCE BY OWNER. THIS DOCUMENT SHALL BE RETURNED TO OWNER UPON REQUEST. IT MAY BE SUBJECT TO CERTAIN RESTRICTIONS UNDER APPLICABLE EXPORT CONTROL LAWS AND REGULATIONS.

TOLERANCES UNLESS OTHERWISE SPECIFIED:

| DEC. | INCH | mm | ANGLE |
|---|---|---|---|
| .X | ±0.1 | [±2.5] | ±0.5° |
| .XX | ±0.01 | [±0.25] | |
| XXX | ±0.005 | [±0.127] | |
| .XXXX | ±0.0005 | [±0.0127] | |

REMOVE BURRS & BREAK SHARP EDGES: .003/.015 [.076/.381]
CORNER FILLETS: .02 [.51]
MACHINED SURFACES: 125 INCH / 3.2 mm
mm SHOWN IN [BRACKETS]

| | |
|---|---|
| DRAWN BY | DMT |
| DATE | 01-23-2001 |
| APPROVED BY | JES |
| DATE | 01-24-2001 |
| REFERENCE | |
| THIRD ANGLE PROJECTION | |

Regal Beloit America, Inc.

DESCRIPTION: OUTLINE
360TS/US FR - TEFC - TAPPED LEAD HOLE

MATERIAL | PROCESS/FINISH

SIZE: B | DRAWING NUMBER: SS518197 | SHEET: 1 OF 1